Carbon Neutral Manufacturing of Reliable Solutions

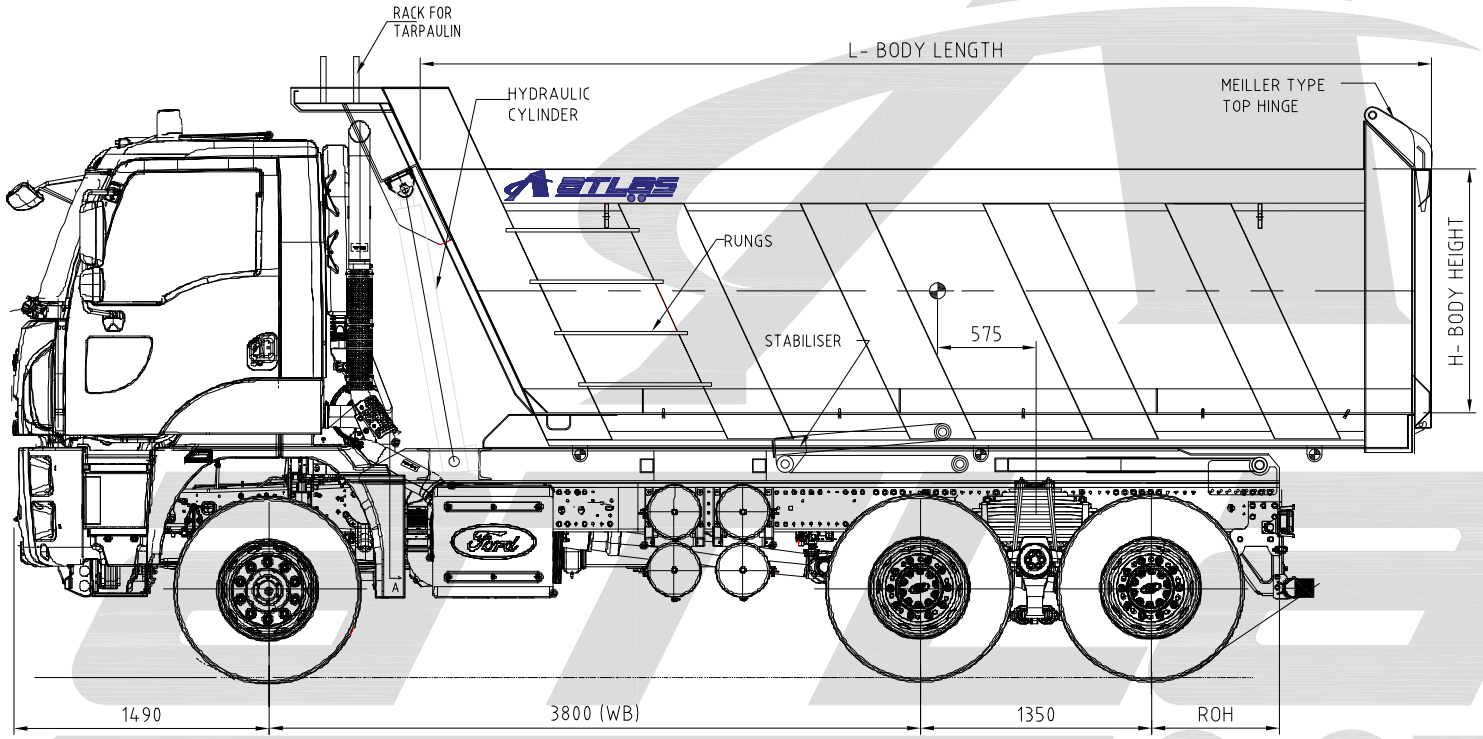

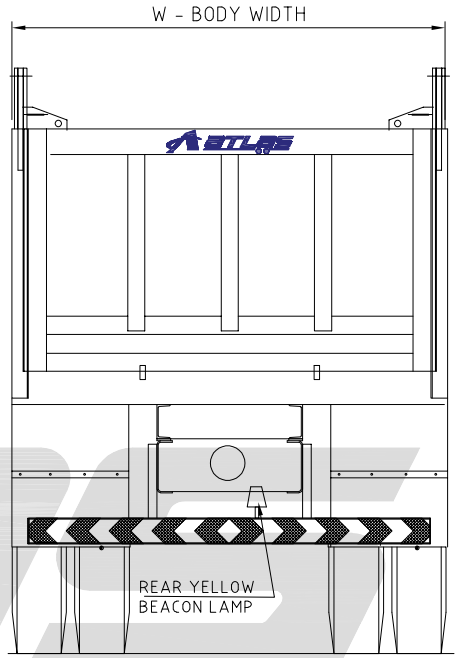

NOTES:-
1. ALL DIMENSIONS ARE IN MM.
2. DRAWING SHOWN FOR REFERENCE ONLY

AL SHIRAWI Equipment Co.

ATLAS an Al Shirawi Equipment

TITLE : 18 CBM TIPPER ON FORD 3543 - (6x4)
(GENERAL ASSEMBLY)

Al Shirawi Equipment Company LLC - Transport & Waste Management
P.O.BOX 10983, DUBAI, U.A.E. Email : sales@equipment.ae , Phone : +971 4 3472606

UAE - +971 569924001	OMAN - +968 96640720	KUWAIT - +965 55434274	QATAR - +974 55960033

Carbon Neutral Manufacturing of Reliable Solutions